DACH

OWNER'S MANUAL

www.dachvehicles.com

Apollo

Table of Contents

1 Contact Us ..... Page 9
2 Introduction ..... Page 11
About This Publication Page 12
Illustrations Page 12
About This Manual Page 13
Important Information Page 13
3 Practice Safety ..... Page 14
Safety Guidelines for Vehicle Maintenance Page 15
Operator Safety Page 16
4 Warranty Information ..... Page 17
Limited Warranty Terms and Conditions Page 19
Exclusions Page 19
Limited Warranty Shall Be Voided If the Vehicle AND/OR Battery Page 20
Sole Remedy Page 20
Liability Page 20
Battery Warranty and Specifics Page 21
Reserved Rights Page 21
DISCLAIMER Page 21
WARNING Page 21

5 Vehicle Model Information ..... Page 22
Dach Aplollo Page 23
Vehicle General Specifications Page 26

6 Seat Belts ..... Page 27
Fastening And Unfastening The Seat Belts Page 28
Seat Belt Precautions Page 28
Seat Belt Extensions Page 29

7 Key ..... Page 30
Key Page 31
NFC and Bluetooth key matching method Page 31
Method for shutting down the vehicle Page 31

8 Side-View Mirrors ..... Page 32
Mirror Adjustment Precautions Page 33

9 Multi-Functional Media ..... Page 34
10 Seats ..... Page 40

11 LiFePO4 Batteries ..... Page 42
Configuration Description Page 43
Operational Safety Page 43
Battery Service Warnings Page 43
Battery Operation Page 45
Battery Installation and Removal Instructions Page 45

12 Charger ..... Page 46
Charger Description Page 47
Charging Procedure Page 47
Vehicle Charging Power Supply Requirements Page 48

13 Brakes ..... Page 49
Brake Operation Page 50
Brake Precautions Page 50
Locating the Brake Fluid Reservoir Checking the Brake Fluid Page 50
Brake Fluid Specification Page 51
Electromagnetic Brakes Page 51
Manual Release of Electromagnetic Brake Page 52

14 Rear-View Camera ..... Page 53

15 Loading Capacity ..... Page 55
16 Towing ..... Page 57
Towing Warnings Page 58

17 Fuses ..... Page 59
Multifunction Steering Wheel Page 66
Cruise Control Page 66
High-Mounted Brake Light Page 68
Roof Logo Light Page 68
Ambient Roof Lights Page 68
Sound Bar Page 68
Roof Speakers Page 68
Bluetooth Music Playback Page 68
USB Music Playback Page 69
Mode Switching and Connection Page 69
Lighting Selection Page 69
Volume Control Page 69
Track Selection Page 69

18 Maintenance ..... Page 70

Wheel Replacement Page 71
Brake Adjustment Page 71
Jacking Points Page 71
Regular Maintenance Chart Page 72

19 Storing the Vehicle Page 73
Preparation Page 74

20 Operation and Control Page 75
Powering the Battery On/Off Page 76
Vehicle Startup Page 77
Vehicle Shutdown Page 77
Caution Page 77
Driving Operations Page 78
Caution Page 78
Driving Operations Page 79
Light Operations Page 80
USB Data Port Page 81
Wireless Phone Charging Page 81

21 Rims & Tires Page 82

Tire Conditions Page 83
Tire Care Tips Page 83

22 Vehicle Starting Procedure Page 84
Vehicle Inspection Page 85
Starting the Vehicle Page 86
Parking and Exiting the Vehicle Page 86

Contact Us

DCD VEHICLE CORP.

www.dachvehicles.com

If you have any questions, please contact service@dachvehicles.com.

Introduction

About This Publication

Thank you for purchasing a DACH Electric Vehicle. This Owner's Manual provides essential information for the proper operation, maintenance, and care of your new DACH vehicle. Familiarizing yourself with this information will help you maximize your DACH vehicle's performance. If you have further questions or need clarification on anything regarding the operation or maintenance of your vehicle, please contact your DACH dealer or visit our website, as follows: www.dachvehicles.com.

Important Notes

Operate your vehicle according to all applicable laws and regulations.
Ensure that all owner's printed information is transferred to the new owner when selling the vehicle.
All detailed photos in this Owner's Manual are for reference only, the actual configuration of the products which you buy may differ from these.

Safety Warning

Distracted driving can lead to loss of control, accidents, and injury. Exercise extreme caution when using any device that may divert your attention from the road. Safe operation of your vehicle is your responsibility. We advise against using hand-held devices while driving and recommend utilizing voice-operated systems when possible. Be aware of local laws regarding the use of electronic devices while driving.

Illustrations

Some illustrations in this manual may show features from different models, which may differ from your vehicle.

About This Manual

Reading this manual will provide a comprehensive understanding of your DACH vehicle.

Important Information

Warning

The safety alert symbol indicates a need for caution. Ignoring these warnings could result in severe injury or death to the vehicle occupants or bystanders.

Caution

Sections under this heading emphasize important precautions to prevent vehicle damage

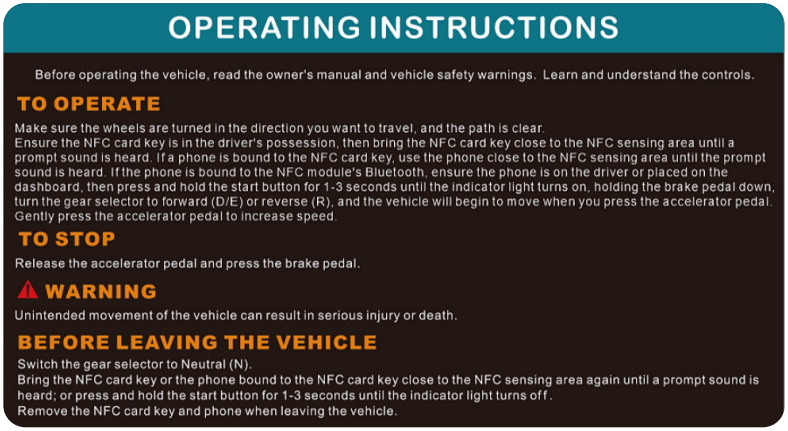

OPERATING INSTRUCTIONS

Before operating the vehicle, read the owner's manual and vehicle safety warnings. Learn and understand the controls.

TO OPERATE

Make sure the wheels are turned in the direction you want to travel, and the path is clear.
Ensure the NFC card key is in the driver's possession, then bring the NFC card key close to the NFC sensing area until a prompt sound is heard. If a phone is bound to the NFC card key, use the phone close to the NFC sensing area until the prompt sound is heard. If the phone is bound to the NFC module's Bluetooth, ensure the phone is on the driver or placed on the dashboard, then press and hold the start button for 1-3 seconds until the indicator light turns on, holding the brake pedal down, turn the gear selector to forward (D/E) or reverse (R), and the vehicle will begin to move when you press the accelerator pedal. Gently press the accelerator pedal to increase speed.

TO STOP

Release the accelerator pedal and press the brake pedal.

WARNING

Unintended movement of the vehicle can result in serious injury or death.

BEFORE LEAVING THE VEHICLE

Switch the gear selector to Neutral (N).
Bring the NFC card key or the phone bound to the NFC card key close to the NFC sensing area again until a prompt sound is heard; or press and hold the start button for 1-3 seconds until the indicator light turns off.
Remove the NFC card key and phone when leaving the vehicle.

Note: DACH Electric Vehicles strives to produce the highest quality products. Although this manual contains the latest product information available at the time of printing, there may be slight differences between this manual and your vehicle. If you have any questions, please contact your DACH dealer or visit www.dachvehicles.com

Practice Safety

Safety Guidelines for Vehicle Maintenance

General Safety Instructions

Always adhere to the manufacturer's safety guidelines outlined in the operation and service manuals. This should include the specific safety measures listed below.

During Maintenance

1. Ensure the vehicle is fully immobilized before starting any maintenance work to prevent unexpected movement.

2.Secure the chassis with blocks when working under the vehicle to prevent it from moving unexpectedly.

3.Disable the electrical system of an electric vehicle before starting work, following the manufacturer’s guidelines, to prevent electrical shocks or damage.

4.Always use insulated tools when servicing electric vehicle components to avoid electrical shock or system damage. near batteries to prevent electrical shocks and damage to the electrical system.

Post-Maintenance Protocols

1.Verify all safety mechanisms like brakes, steering, warning, and lighting system remain in optimal condition. Do not alter these safety mechanisms.

2.Have the vehicle checked by a certified and trained individual in a pedestrian-free area after any maintenance or repair to ensure it is adjusted and functioning correctly.

3.Keep a detailed maintenance log, noting the date, the

maintenance provider's name, and the type of maintenance done. Regularly review the maintenance log to ensure its accuracy and completeness.

4.Utilize operator comment cards to highlight maintenance needs that are not routine for specific vehicles.

5.Ensure that all vehicle labeling, such as nameplates,

warnings, and instructions, remain clear and legible as provided by the manufacturer.

Operator Safety

Before Driving

1. Read the manual and safety instruction labels on the vehicle.
2. Ensure all passengers are seated with seat belts fastened.

Starting and Stopping

1. Turn the key on.
2. Switch the gear onto "D/E" to move forward or "R" to reverse.
3. Press the accelerator to start moving and use the parking pedal to stop.

Driving Safely

1.Drive according to the terrain, visibility, and conditions.
2.Be cautious in crowded or slippery conditions.

Warnings

Water Crossing

Never attempt to drive through deep or flowing water, as this may result in loss of control, injury, or death.

Slippery Conditions

When driving in conditions that require tire chains or cables, drive cautiously. Maintain low speeds, allow for longer stopping distances, and avoid aggressive steering to prevent losing control, which can cause serious injury or death. If the vehicle begins to skid while turning, steer in the same direction as the skid until control is restored.

Passengers and Children

Do not allow a passenger to hold a child on their lap while the vehicle is moving. Failure to follow this can result in injury or death during a sudden stop or crash.

Child Safety

Do not use pillows, books, or towels to boost a child's height. Ensure the shoulder section of the seat belt is properly positioned, not under the arm or behind the back, to maintain its effectiveness and reduce injury or death risk in a crash.

Unattended Children and Pets

Never leave children or pets unattended in the vehicle. Failure to follow this can result in injury or death.

Warranty Information

DACH

2025 Aplollo

Experience The Future Golf Cart With

Limited Warranty Terms and Conditions

DACH VEHICLE CORP("DACHŽm") provides a Limited Warranty for any new electric vehicle,ensuring it is free from material or workmanship defects. This warranty covers parts only and isapplicable to the original purchaser. DACHim warrants to the Original Purchaser or Lessee, asdefined herein, and subject to the conditions, limitations, and exclusions in this warranty, that anynew vehicle or new component purchased from DACHrm, or an Authorized Dealer or Distributor.wil be free from defects in material and workmanship under normal use and service for thespecified periods below.

Limited Warranty Period:Commences on the vehicle's retail date of purchase.

Part or Component	Warranty	Part or Component	Warranty
Frame	LIFETIME	LiFePO4 Battery(Full Replacement)	5 Year
Controller	3 Year	Electric Motor & Rear Axle	3 Year
Solar Panel	2 Year	Windshield	1 Year
All Other Parts and Components			2 Year

Exclusions

• Routine maintenance, normal wear and tear, proper tire pressure and cosmetic deterioration, orelectrical components damaged as a result of fluctuations in electrical current.

• Damage caused by neglect, abuse, accidents, unauthorized parts or accessories, or externalevents such as vandalism or acts of nature.
• Repairs performed by someone other than an authorized and qualified Dealer or Dealer personnelshall void the Limited Warranty.
• Expenses for transportation to/from service locations.
• Fuses, decals (except safety decals), light bulbs, lubricants, trim pieces, seat cushions, routinewear items such as brake shoes, bushings, mats and pads, tires and maintenance adjustments.
• Cosmetic deterioration and items that deteriorate or fail due to environmental exposure orordinary wear and tear, including paint fading due to chronic sun exposure or improper storage.

Limited Warranty Shall Be Voided If the Vehicle AND/OR Battery

• shows signs of neglected maintenance or use beyond the description in the Owner's Manual.
• shows signs of usage of non-OEM (unapproved) parts, modifications, or alterations.
• shows siqns of non-approved electrical installations or modifications.

Sole Remedy

If any defect arises, DACH™ will, at its discretion, repair or replace the part with original OEM parts or reconditioned parts at its factory option. As for the defective parts, replaced under the terms of this Limited Warranty, are the sole properties of DACH™ and must be returned to DACH™ upon request.

Liability

In no case shall DACH™ be liable for indirect, incidental, special, punitive, or consequential damages, including but not limited to death, personal injury, or property damage arising from or related to any alleged failure in a vehicle or battery charger, or any damage or loss to the purchaser or any third party for lost time, inconvenience, or any economic loss, whether or not the company was aware of the foresee ability of such damages or losses. Any legal claim related to a warranty breach must be filed within three (3) months from the date of the claim. This limited warranty gives you specific legal rights, and you may have other rights which vary from state to state. Some states do not allow the exclusion of incidental damages or limitations on how long an implied warranty may last, so the above exclusions and limitations may not apply to you.

Battery Warranty and Specifics

- The warranty period for amp hours is tracked by DACH™.
- Battery warranty claims must undergo testing specified by DACH™.
- Any non-factory modifications made directly to the batteries will void the Limited Warranty.
- The 5-year full replacement battery warranty is only applicable to personal-use vehicles, excluding commercial-use vehicles.
- Warranty for any rental usage vehicles, taxi or other excessive use application is six (6) months and must be registered as such.

Reserved Rights

DACH™ retains the right to inspect vehicles, modify designs, or evaluate warranty claims without having to update previous products. The purchaser acknowledges that this Limited Warranty is the complete warranty provided by DACH™, and any exceptions or modifications to this warranty are invalid without written approval from DACH™ Corporation.

DISCLAIMER

THIS LIMITED WARRANTY IS EXCLUSIVE. DACH™ MAKES NO OTHER WARRANTIES, EXPRESS OR IMPLIED. ANY IMPLIED WARRANTIES OF MERCHANTABILITY OR FITNESS FOR A PARTICULAR PURPOSE THAT EXCEED THE OBLIGATIONS OR TIME LIMITS STATED IN THIS WARRANTY ARE DISCLAIMED BY DACH™ AND EXCLUDED FROM THE WARRANTY. REPAIRING THE DEFECTIVE VEHICLE OR COMPONENT IS THE PURCHASER'S SOLE REMEDY. DACH™ MAKES NO OTHER REPRESENTATIONS OR WARRANTIES OF ANY KIND, AND NO REPRESENTATIVE, EMPLOYEE, DISTRIBUTOR, OR DEALER OF DACH™ HAS THE AUTHORITY TO MAKE OR IMPLY ANY REPRESENTATION, PROMISE, OR AGREEMENT THAT VARIES THE TERMS OF THIS WARRANTY.

WARNING

ANY MODIFICATION OR ALTERATION TO THE VEHICLE BEYOND FACTORY SPECIFICATIONS, INCLUDING CHANGES THAT AFFECT THE WEIGHT DISTRIBUTION, STABILITY, OR SPEED OF THE VEHICLE, CAN RESULT IN SERIOUS PERSONAL INJURY OR DEATH AND WILL COMPLETELY VOID THIS WARRANTY.

IF THE PRODUCT WARRANTY REGISTRATION FORM IS NOT COMPLETED ANDSUBMITTED TO DACHIM AT THE TIME OF THE ORIGINAL RETAIL SALE, THE PURCHASERMUST PROVIDE PROOF OF THE PURCHASE DATE, SUCH AS THE ORIGINAL RETAILCUSTOMER INVOICE OR BILL OF SALE, WITH ANY WARRANTY CLAIM.

Vehicle Model Information

Rider

Explorer

Black

Metallic Silver

Apollo

Orange

Serene Grey

Silver Pattern

Wood Grain

Range Notice: The driving range may vary depending on battery selection, road conditions, terrain type,passenger load, and other factors.

Disclaimer: Illustrations are for reference only; the actual cart may differ.

Note: Photos are for display purposes only and may not reflect the actual configuration of the purchased product.

Battery	73.6V 105AH LiFePO4(7.728kwh)
Controller	72V 350A AC Controller
Motor Type	72V AC 6.3KW Motor
Charger	110V-240V/ 20A Onboard Charger
Dimensions (LWH)	120x55.1x79.9 (78.3)Inches(with bumper guard and side step, height varies with configuration)
Max Load Capacity	758 lbs
Accelerator	Hall Effect Accelerator 0 -5V
Net Weight	1420/1389/1378 lbs
Passenger Capacity	4
Chassis	Automotive-grade full stamped body
Range	50 miles(at 19 mph constant speed)
Wheelbase	85.0 in
Max speed	25 mph
Front Track	41.6 in
Min Turning Radius	14.8 feet
Rear Track	39.8in
Max Gradient	30%
Tire Size	22*10-14 (Aluminum Alloy Rim)
Min Ground Clearance	7.0 in
Braking Distance	≤26.2 feet (full speed, full load)
Windshield	Hinged double -fold edge glass
Dashboard	12.3-inch TFT LC D touch display (includes battery level, current, voltage, mileage,speed, error codes, MP3, Mp4, reverse camera,light control,radio, CarPlay,Android Auto,etc.)

Body Material	PP +EPDM-T20
Roof Material	PP
Mirrors	Left and right mirrors (with turn signal),interior mirror
Suspension	Front independent double-arm suspension / rear axle (12.3 1:1) +trailing arm + high-strength spring shock absorber
Steering Systen	Self-compensating gear rack steering
Braking System	Front and rear disc brakes & electronic parking brake
LED Lighting System	Front LED headlights + position lights +turn signals, rear brake lights + position lights +turn signals +reverse lights, high-mounted brake light
Steering Column	With com bination switch (turn signal switch, position light switch, high/low beam switch)
Accelerator	Hall Effect Accelerator 0-5V
Drive Mode	Electromechanicalintegration
Rear Axle	Integrated, transmission ratio 12.3 1:1
Startup	NFC +phone NFC +phone Bluetooth with one-key start switch
Gearshift	R-N-D-E
Sound System	Soundbar system
Multifunction Steering Wheel	Yes
Cruise Control	Yes
Red Calipers & Red Shock Springs	yes
Roof Configuration	Roof lining +2x6.5-inch speakers +am bient lights +roof logo light +high-mounted brake light +soundbar system
Phone Charging	Wireless phone charging + wired phone charging +USB file playback
Music playback	Bluetooth connection +USB file playback

"A unibody frame and anti corrosion chassis designed to carry timeless classics into the future."

The Dach golf cart features a Monocoque Frame design that combines the body and frame, reducing weight and improving rigidity for better battery range and comfort. It outperforms traditional body-on-frame models in handling and comfort, making it suitable for golf courses and recreational use. The durable electroplated and powder-coated chassis provides 360-degree corrosion protection, while thicker beams enhance safety and handling.

The 72V battery extends driving range while featuring Dach's proprietary protection technology for improved safety, longer lifespan, and a more reliable, worry free experience

The 12.3-inch touch display offers ultra clear features like battery status, speed, MP3, MP4, reverse camera, CarPlay, and Android Auto. Anti-glare technology ensures perfect visibility in any lighting

"The first golf cart in the industry with cruise control"

Dach Apollo is the first golf cart in the industry with cruise control, enhancing comfort and convenience. It maintains a set speed, reducing driver fatigue and improving safety on long routes. The intelligent steering wheel boosts driving precision and allows easy control of music, ensuring a more focused and enjoyable driving experience

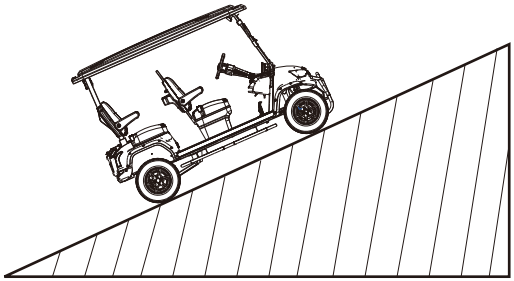

Recommended Max Ramp 30% Grade

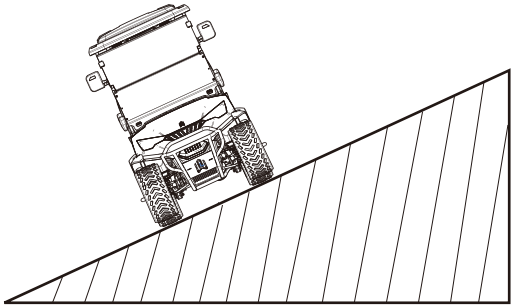

Recommended Max Tilt Angle 25 %

Vehicle General Specifications

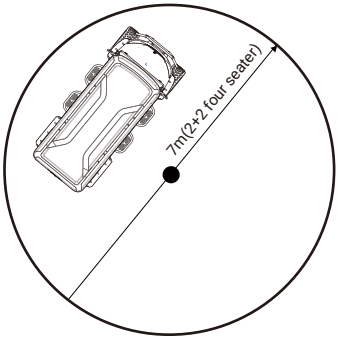

Vehicle Turning Clearance Diameter

Seat Belts

Fastening and Unfastening the Seat Belts

Fastening the Seat Belts

1.Insert the tongue into the buckle.
2.Pull the seat belts tight to remove any slack.

Unfastening the Seat Belts

1.Press the red button on the buckle to release the seat belts.
2.Hold the seat belt tongue and allow it to retract completely and smoothly to its stowed position.

Seat Belt Precautions

Warning

Proper Usage

Always drive and ride with your seat belt upright, and ensure the lap belt is snug and low across the hips.

Child Restraint

Children under 12 must be secured using a child safety seat appropriate for their age and size.

No Lap Holding

Do not allow a passenger to hold a child on their lap while the vehicle is moving. Failure to follow this could result in injury or death during a sudden stop or crash.

Occupant Seat Belt Usage

All vehicle occupants, including the driver, must always wear their seat belts properly, even if the vehicle is equipped with an airbag supplemental restraint system. Not wearing a seat belt properly significantly increases the risk of injury or death.

Rollover Safety

In a rollover crash, unbelted individuals are significantly more likely to die than those wearing seat belts.

Specific Seat Belt Use

Each seating position has a specific seat belt assembly consisting of one buckle and one tongue designed to be used together. Use the shoulder belt on the outside shoulder only. Never wear the shoulder belt under the arm. Never use a single seat belt for more than one person.

Child Restraint

Even with advanced restraint systems, always properly restrain children 12 and under in a rear seating position. Failure to do so could significantly increase the risk of injury or death.

Warning

Hot Surface – Check seat covers and buckles before placing a child near them.

Post-Crash Inspection

If your vehicle is involved in a crash, have the seat belts and related components inspected as soon as possible.

Correct Usage

This system will only provide protection when the seat belt is used correctly.

Cleaning Warning

Do not use cleaning solvents, bleach, or dye on the vehicle's seat belts, as these actions may weaken the belt webbing.

Seat Belt Extensions

Child Restraint Positioning

Depending on the child restraint design and its position, access to certain seat belt buckle assemblies and LATCH lower anchors may be blocked, making them unusable. To avoid injury, ensure occupants use seating positions where they can be properly restrained.

Unnecessary Extension Use

People who fit into the vehicle's seat belt should not use an extension. Unnecessary use could result in serious injury in a crash.

Proper Extensions

Only use extensions provided by our dealers, designed specifically for your vehicle, model year, and seating position. Extensions intended for other vehicles, model years, or seating positions may not offer full protection.

Child Restraints

Seat belt extensions should never be used for child restraints.

Fit Adjustment

Do not use extensions to change how the seat belt fits across the torso, over the lap, or to make the seat belt buckle easier to reach.

Key

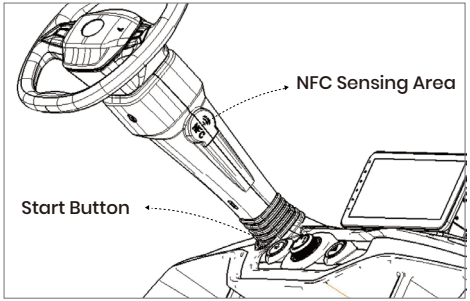

Warning

1. When using NFC keys, please be sure to stay away from strong magnetic areas to avoid vehicle malfunction caused by key demagnetization.
2. When stopping the use of the vehicle, please make sure to turn off the vehicle power.

Key

The vehicle supports NFC and Bluetooth key start control, and comes standard with 2 NFC keys.

The right way to use NFC key is to use the NFC key to approach the NFC sensing area, start the vehicle, and there will be a start prompt sound.

The right way to use Bluetooth key is to carry a matched Bluetooth device, such as a mobile phone or wristband, and approach the vehicle, and press the start switch to start the vehicle, and there will be a start prompt sound.

NFC and Bluetooth key matching method

1. Bluetooth pairing: Use the matching NFC key and keep it in the sensing area for 5 seconds. At this time, the horn will sound 3 times, prompting to enter Bluetooth matching (the key can be released at this time). Then operate your phone, find the vehicle in the Bluetooth settings, and connect it.

2. NFC Pairing:Short press the activation button 5 times within 5 seconds, then swipe it with the matching NFC key within 3 seconds. The horn will sound 3 times to indicate that you have entered NFC pairing. At this time, use a new NFC card to approach the sensing area and the horn will sound 1 sound to indicate successful pairing.

Method for shutting down the vehicle

1. When the vehicle is in the starting state, use the long skill start switch to turn off the power and the vehicle will turn off the power with a high power-off prompt.

2. Use the NFC key to approach the sensing area and the vehicle will turn off the power with a power-off prompt sound.

Side-View Mirrors

Mirror Adjustment Precautions

Adjust each mirror manually before turning the key to start the vehicle.

Warning

Do not adjust the mirrors while the vehicle is in motion, as this could lead to loss of control, serious injury, or death.

DACH

Multi-Functional Media

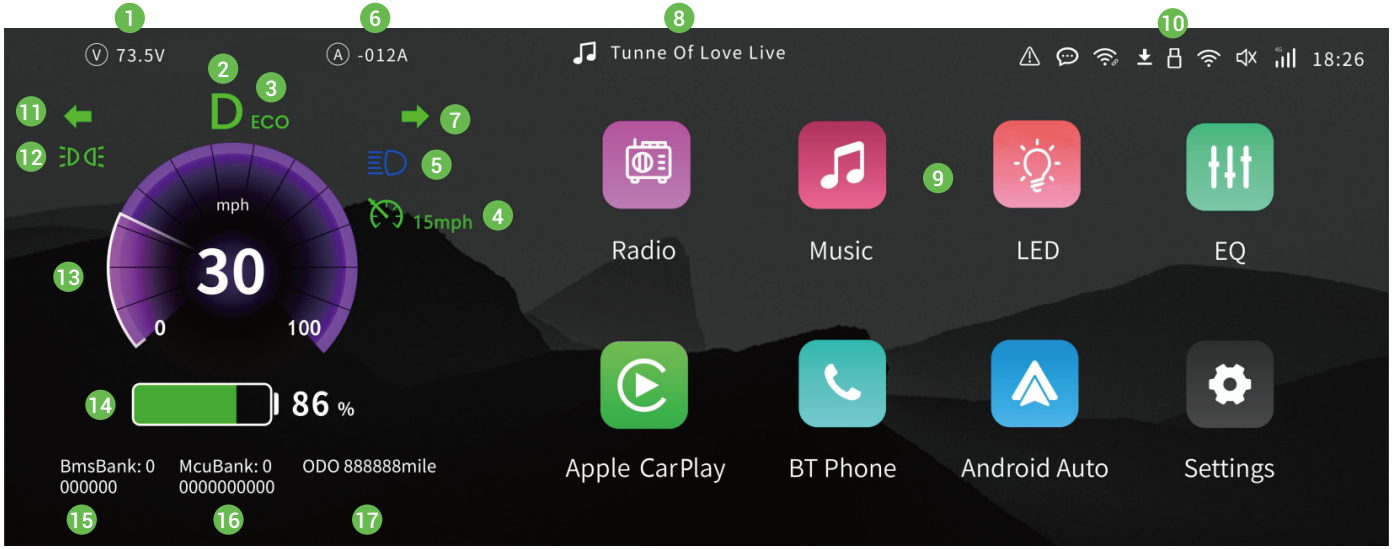

1.Voltmeter
2.Gear Indicator
3.Driving Mode Indicator
4.Cruise Control Mode Indicator
5.High Beam Indicator
6.Ammeter
7.Right Turn Signal Indicator
8.Multimedia Playback Information Display
9.Multimedia Display Area
10.Connectivity Information Display Area
11.Left Turn Signal Indicator
12.Light Indicator
13.Speedometer
14.Battery Gauge
15.BMS Fault Display Area
16.MCU Fault Display Area
17.Odometer

1、Voltmeter
Indicates real-time voltage changes of the power battery.

2、Gear Indicator
Displays the current gear status of the vehicle.
R: Reverse gear.
N: Neutral gear.
D: Drive gear.

3、Driving Mode Indicator:
Displays the vehicle's operating mode.
No display: Standard operation.
ECO: Energy-saving mode, with a maximum speed below 15 mph.

4、Cruise Control Mode Indicator:
Indicates the current cruise control status and the set cruising speed.
If the cruise speed displays as "0 mph," the vehicle is in standby mode for cruise control.

5、High Beam Indicator:
Indicates whether the high beams are turned on.

6、Ammeter:
Displays the real-time current status of the power battery.
Negative values indicate that the battery is in a charging or energy recovery state.

7、Right Turn Signal Indicator:
Indicates the status of the right turn signal.
Normally, the indicator and turn signal flash at a fixed frequency.
If the turn signal is turned on and the indicator remains constantly lit, it suggests a malfunction in the right turn signal.
When the hazard lights are activated, both the left and right turn signal indicators and lights flash synchronously at a fixed frequency.

8、Multimedia Playback Information Display:
Displays information such as the current multimedia audio name.

9、Multimedia Display Area:
Shows the reverse camera view and multimedia app information.
Display content and operations may vary depending on software versions and multimedia configurations. Refer to the multimedia user manual for details.

10、Connectivity Information Display Area:
· Displays phone information when connected via CarPlay or Android Auto.
· Display content and operations may vary depending on software versions and multimedia configurations. Refer to the multimedia user manual for details.

11、Left Turn Signal Indicator:
· Indicates the status of the left turn signal.

· Indicates the status of the left turn signal.
Normally, the indicator and turn signal flash at a fixed frequency.
· If the turn signal is turned on and the indicator remains constantly lit, it suggests a malfunction in the left turn signal.
· When the hazard lights are activated, both the left and right turn signal indicators and lights flash synchronously at a fixed frequency.

12、Light Indicator:

Indicates whether the position lights are turned on.

13、Speedometer:

Displays the vehicle's real-time operating speed.

14、Battery Gauge:

Indicates the remaining power level of the vehicle.

15、BMS Fault Display Area:

Displays fault information for the power battery system.
If no display is present, it indicates no faults in the power battery system.

16、MCU Fault Display Area:

Displays fault information for the motor drive system.
If no display is present, it indicates no faults in the motor drive system.

17、Odometer:

Displays the total distance the vehicle has traveled.

Warm Reminder

Avoid Distraction

While the interface offers many features, safety driving should always come first. System interaction is only allowed when the golf cart is stationary.

Any differences in appearance and functional details caused by configurations or product upgrades will not be reflected in this product manual.

Battery Monitoring

Pay attention to the battery gauge to ensure you have enough power to complete your entire journey.

Periodic Updates

The company will periodically release updated multimedia features on its official website. Please stay informed about updates and follow the operation guide to complete the update process. This ensures your multimedia system runs optimally and includes the latest features.

*Applicable to vehicles equipped with top ambient lighting

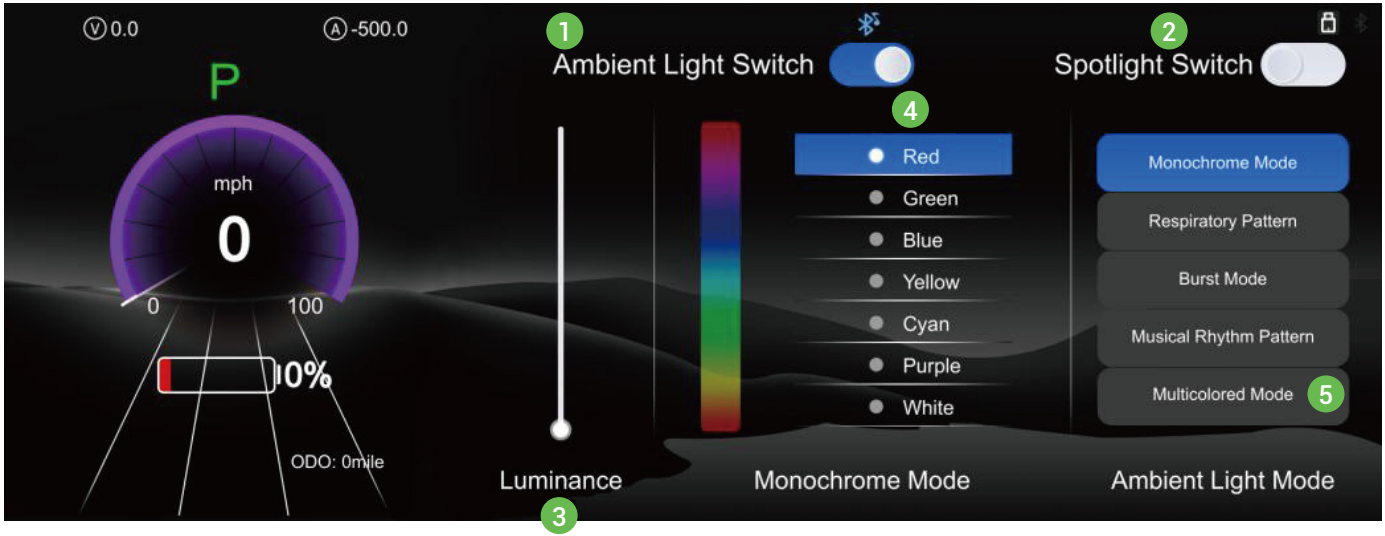

Ambient Light On/Off:

Turn on the top ambient light to enable brightness adjustment, color adjustment, and mode settings. Ensure that the setting card is activated to allow configuration.

Brightness Adjustment:

Adjust the brightness level of the top ambient light from low to high, with 8 levels available.

Color Adjustment:

Select the color of the top ambient light. The available colors include red, green, blue, yellow, cyan, purple, orange, and white (8 monochromatic options).

Mode Settings:

Set the lighting mode for the top ambient light. The available modes include:

- Single Color Mode
- Breathing Mode
- Dynamic Launch Mode
- Music Rhythm Mode
- Multicolor Mode

Among these, brightness and color adjustments are available in Single Color Mode, Multicolor Mode, Shadow Mode, Enhancement Mode, and Wave Mode.

Spotlight On/Off:

Used to turn on the spotlight configuration of the vehicle. (Only applicable to vehicles equipped with spotlights.)

Seats

Weight Capacity

In the designed state, the front and rear seats can each accommodate two passengers (including the driver). Both the driver and passengers must wear safety belts properly.

Cleaning Instructions

Regularly clean the seats with a mild soap solution and a soft cloth. Avoid using abrasive cleaners or brushes that could damage the seat material.

Safety Belts

Always fasten the safety belts securely when the vehicle is in use. Regularly inspect the belts for signs of wear or damage and replace if necessary.

Sun Exposure

When not using the solar panel to charge, park the golf cart in a shaded area or use a cover to prevent prolonged sunlight exposure from causing damage to the seat leather and materials.

Seat Adjustment

When adjusting the seat position, ensure the cart is stationary. Adjust the seat gently to avoid damage to the adjustment mechanisms.

LiFePO4 Batteries

Configuration Description

This vehicle is equipped with a 73.6V 105Ah lithium iron phosphate battery, installed under the front row seat.

*Battery configuration and model may change, and such updates may not be reflected in this manual.

Operational Safety

1.Over time, all batteries will self-discharge. The rate of self-discharge depends on the ambient temperature and the aging condition of the battery.

2.When storing the vehicle, turn off the main power switch and disconnect the battery power button.

3.If the vehicle is left unused, inspect it at least once every 30 days and charge the battery as needed.

Battery Service Warnings

Warning

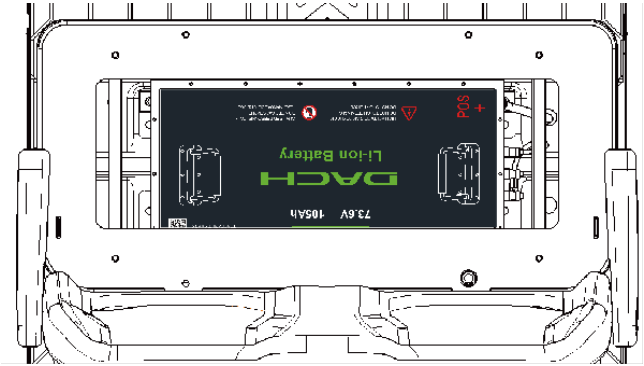

1.Battery servicing must only be performed by qualified automotive technicians. Improper operation may lead to severe injury or death.

2.When connecting the battery pack, incorrect plug alignment can result in an electric shock hazard. If you are unsure of the plug's compatibility, consult a certified technician. Do not attempt to plug in an incompatible connector, as this may damage the battery.

3.Ensure that the plug is installed by a licensed electrician using a compatible socket. Installation must comply with the National Electrical Code (NEC) and all local regulations. If local regulations differ from NEC standards, the stricter regulation should be followed.

4.Avoid using damaged connectors or cables.

5.If stored outside the recommended temperature range, avoid using the battery.

6.If the terminal or plug becomes damaged or the circuit breaker trips, contact your authorized dealer for assistance. Do not attempt repairs on your own.

7.Battery Warnings
Read the Charger Power Cable Warning: Before the first operation, carefully read the warnings on the charger power cable and the relevant sections of this manual.

8.Do Not Forcefully Pull or Extend the Cable:
Avoid pulling or overextending the charger's power cable.

9.Shock Hazard:
Ensure the plug is fully inserted into the wall outlet to ensure no metal prongs are exposed.

10.Supervised Charging:
The charger must only be operated under supervision when in use.

11.Do Not Insert Non-Compatible Plugs:
Only use plugs compatible with the lithium battery pack's protection mode and operation mode.

Battery Protection Mode
The battery pack is equipped with a protection mode that activates after long periods of inactivity. In this mode, the battery enters a low-power sleep state to prevent over-discharge. To reactivate the battery from protection mode, the SOC (State of Charge) conditions must be met.

12.Fire Hazard Mitigation:
Connect the battery only to NEC-compliant and legally installed electrical systems with a maximum 40A circuit protection.

13.Ensure Proper Ventilation:
Make sure there is adequate ventilation, especially during charging.

14.Protection Mode Activation Conditions:
SOC between 21% and 100%: Duration exceeds 15 days.
SOC below 20%: Duration exceeds 48 hours.
Low current discharge (0.5A–2A): Duration exceeds 3 hours.
In protection mode, the battery is in a sleep state, and the power button's LED indicator will not light up. To wake the battery from low-power mode, press the power button.

If your battery enters protection mode and the SOC is less than 50% after activation, it isrecommended to fully charge the battery before use.

Battery Operation

Secure the battery to the vehicle body using screws, Ensure the positive and negative terminals ofthe battery, as well as the communication cable, are securely connected. The battery powerbutton must be in the "on" position. The vehicle can only operate when all the above conditionsare met.

Battery Installation and Removal Instructions

1. Turn off the vehicle power and battery switch.
2, Disconnect the communication cable, negative terminal, and positive terminal in sequence.
3, Unscrew the 4 screws securing the battery, then lift and remove the battery manually.

Reinstallation: Follow the steps above in reverse order.

Note: Due to differences in product configurations and potential updates to battery specifications andappearance, such changes may not be reflected in this manual.

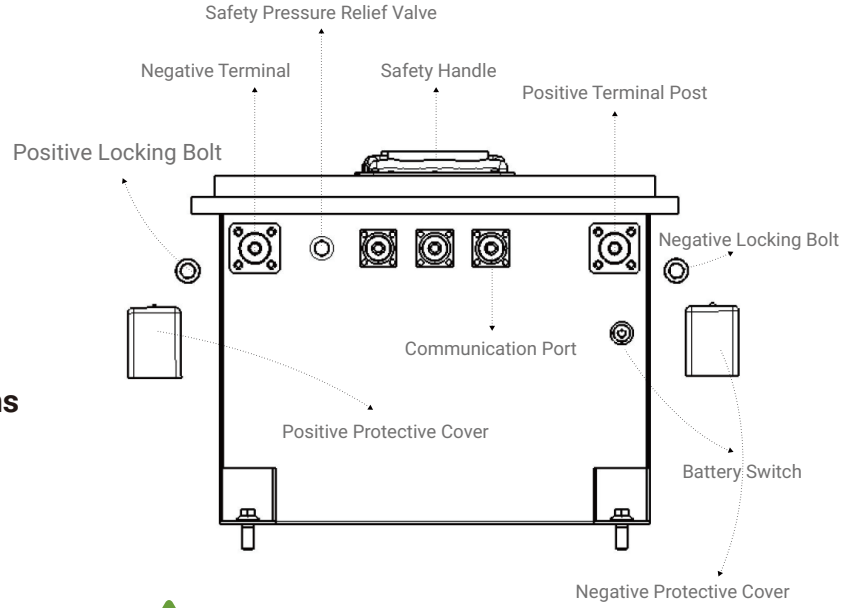

Warning

Unless you are a qualified professional, do not attempt to remove the battery! Before removingthe battery, ensure the vehicle and battery power are completely turned off.

Charger

Charger Description

The onboard charger is installed in the ventilation compartment under the rear seat and communicates with the vehicle system via the CAN bus. Once connected to a power source, the charger dynamically adjusts the output voltage and current based on the requirements of the battery pack.

- Output voltage: Up to DC 86V
- Maximum output current: 25A

The charger is connected to the power grid via a plug located in the rear seat compartment. It converts AC 110V household electricity into DC to charge the battery pack.

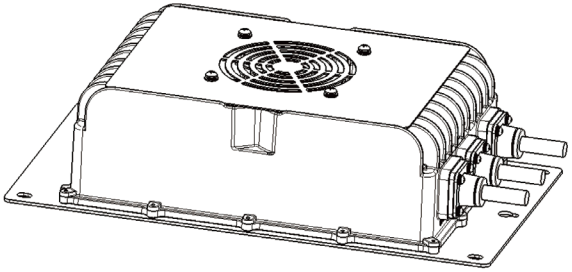

Charging Procedure

1.The charger dynamically adjusts the output voltage and current based on the battery control system requirements to ensure safe operation.

2.Insert the charger plug into the vehicle's charging port and ensure the connection is secure.

3.Plug the other end of the charging cable into a 110V household outlet.

4.When charging begins, the indicator light will flash red. Once the battery is fully charged, the light will turn green.

5.After charging is complete, unplug the charger from the household power outlet first, then disconnect the charger from the vehicle's charging port. Ensure the charging port cover is closed and returned to its original position.

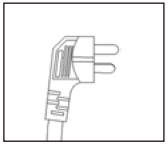

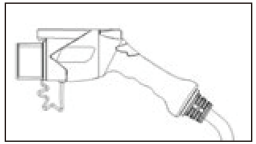

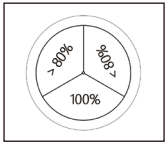

Vehicle Charging Power Supply Requirements

The vehicle is designed to accept AC power from an AC110V - 140V outlet, and the power supply should be capable of at least 16A output.

Warning

1.Do not immerse the charging equipment in water or other liquids. Otherwise, it may cause fire, serious personal injury, or death.

2.Do not charge the vehicle when the charging equipment is faulty. Otherwise, it may cause fire, serious personal injury, or death.

3.Non-professionals should not open the charging equipment. Otherwise, it may cause personal injury, death, or property damage.

4.Install the charging equipment according to local regulations. Otherwise, it may cause personal injury, death, or property damage.

Note:
Due to differences in product configurations and potential updates to the appearance and specifications of the charger, such changes may not be reflected in this manual.

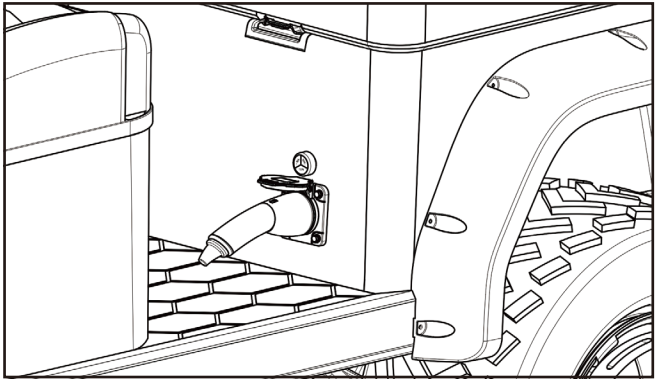

Brakes

Brake Operation

Ensure that the brakes are functioning properly. When the brake pedal is depressed with moderate pressure, the vehicle should come to a smooth, straight stop. If the vehicle pulls to one side or fails to stop, stops suddenly, or makes a grinding or squealing noise, have the brake system inspected and adjusted as required. Continuous, moderate pressure on the brake pedal should lock the wheels, but using less pressure should allow for a slow, gradual stop.

Brake Precautions

⚠ Warning

Do not use fluid other than the recommended brake fluid as this will reduce brake efficiency. Use of incorrect fluid could result in the loss of vehicle control, serious personal injury or death.

⚠ Warning

Only use brake fluid from a sealed container. Contamination with dirt, water, petroleum products or other materials may result in brake system damage or failure. Failure to adhere to this warning could result in the loss of vehicle control, serious personal injury or death.

⚠ Warning

Do not allow the fluid to touch your skin or eyes.If this happens, rinse the affected areas immediately with plenty of water and contact your physician.

⚠ Warning

The brake system could be affected if the brake fluid level is below the MIN mark or above the MAX mark on the brake fluid reservoir.

Locating the Brake Fluid Reservoir Checking the Brake Fluid

01. Park your vehicle on a level surface.

02. Look at the brake fluid reservoir to see where the brake fluid level is relative to the MIN and the MAX marks on the reservoir.

Note: To avoid fluid contamination, the reservoir cap must remain in place and fully tight, unless you are adding fluid.
Location of resevoir is typically underneath the dashboard component

Brake Fluid Specification

Use fluid that meets the defined specification and viscosity grade. (DOT4)

If you do not use fluid that meets the defined specification and viscosity grade, it could result in:

- Component damage that your vehicle warranty does not cover
- Reduced brake performance.

Electromagnetic Brakes

Your vehicle is equipped with electromagnetic brakes. Please observe the following precautions when using them:

1. The electromagnetic brake will automatically engage when the vehicle comes to a complete stop.

2. The electromagnetic brake will automatically disengage when the accelerator pedal is depressed while the vehicle is in gear.

3. The manual EMB function can be used if the vehicle needs to be pushed manually. The manual EMB switch is located under the rear seat on the right side of the battery. When the switch is pushed to the EMB side, the battery will output current to the electromagnetic brake, keeping it in the released position. In this position, the vehicle can be pushed or towed. When the vehicle reaches the desired location, be sure to push the EMB switch to the RUN position.

4. When the vehicle's EMB switch is in the EMB position, the vehicle will not have automatic braking capability and can move freely. Please do not leave the vehicle unattended while in the EMB position, as the vehicle's free movement could injure others.

5. Do not leave the EMB switch in the EMB position for extended periods of time, as this could cause irreversible damage to the electromagnetic brake.

6. If the vehicle's battery fails and is unable to output voltage, the EMB switch will not be able to release the electromagnetic brake. In this case, the electromagnetic brake can be released manually. For specific instructions, see the manual release of the electromagnetic brake.

Manual Release of Electromagnetic Brake

1.The electromagnetic brake is installed on the right side of the motor and can be observed from the rear wheel.

2.Two protruding hex screws can be observed on the electromagnetic brake.

3.Use a 6mm hex wrench to turn the screws clockwise (approximately 3 turns).

4.Tighten the protruding screws to release the brake, allowing the vehicle to move freely.

5.Perform the reverse operation to re-engage the brake.

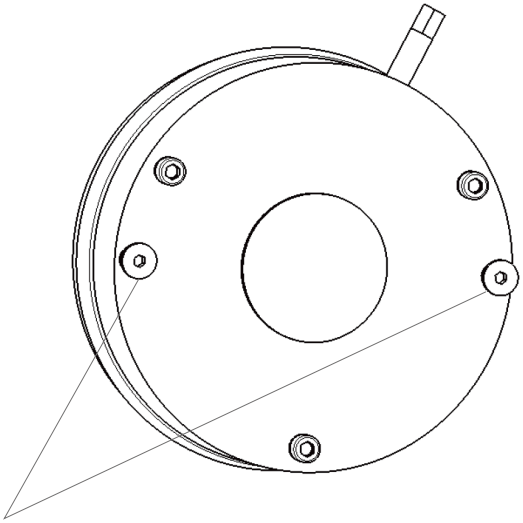

Srews for Releasing Brake

Rear-View Camera

⚠ Warning

A reversing camera system is a reversing aid that uses a camera to capture real-time footage of the area behind the vehicle and displays it on the vehicle's screen, allowing the driver to see what is behind the vehicle directly.

⚠ Warning

The corners of the bumper or under the bumper may not be visible on the screen because the camera system has a limited field of view.

⚠ Warning

When reversing, it is important to use the reversing camera system in conjunction with the interior and side-view mirrors, and to pay close attention to the surroundings to ensure a safe reversing maneuver.

Caution: Always reverse slowly and check surroundings.

Failure to follow this instruction could result in loss of control of your vehicle, personal injury, or death.

Loading Capacity

Ensure your vehicle's load remains within the manufacturer's specified weight limit.. Properly loading your vehicle provides maximum return of vehicle design performance. Before you load your vehicle, become familiar with the following terms for determining your vehicle's weight rating, from the vehicle's Safety Compliance Certification Label.

⚠ Warning

The appropriate loading capacity of your vehicle can be limited either by volume capacity (how much space is available) or by payload capacity (how much weight the vehicle should carry). Once you have reached the maximum payload of your vehicle, do not add more cargo, even if there is space available. Overloading or improperly loading your vehicle can contribute to loss of vehicle control and vehicle rollover.

⚠ Warning

Exceeding the Safety Compliance Certification label vehicle weight limits can adversely affect the perfomance and handling of your vehicle. .which causes damage and can result in the loss of control of your vehicle, serious personal injury or death.

⚠ Warning

Do not use replacement tires with lower load carrying capacities than the original tires because they may lower your vehicle's GVWR and GAWR limitations. Replacement tires with a higher limit than the original tires do not increase the GVWR and GAWR limitations.

⚠ Warning

Do not exceed the GVWE or the GAWR specified on the certification label.

⚠ Warning

When loading the roof racks, we recommend you evenly distribute in the load, as well as maintain in a low center of gravity. Loaded vehicles, with higher centers of gravity, may handle differently than unloaded vehicles. Take extra precautions, such as slower speeds and increased stopping distance, when driving a heavily loaded vehicle.

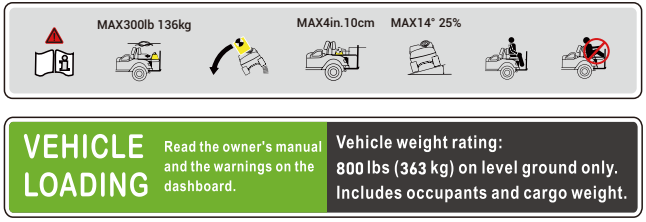

Towing

Towing Warnings

Do not tow with this vehicle.

⚠ Warning

Exceeding any vehicle weight rating can adversely affect the perfomance and handling of your vehicle, cause vehicle damage and can result in the loss of control of your vehicle, serious personal injury or death.

Fuses

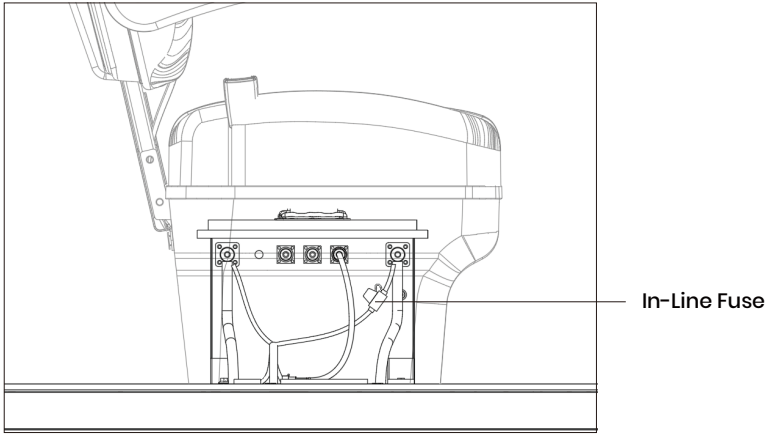

Fuse Name	Fuse Number	Fuse Amperage	Protected Circuit	Failure Symptom	Replaceable Fuse Type	Dimensions
In-Line Fuse	FF0	15A	① Toggle Switch ② Brake Relay ③ One-Button Start Controller ④ DC-DC Converter	Vehicle Unable to Power On	32V 15A HB Medium Blade Fuse	19mm x 19mm

Fuse Name	Fuse Number	Fuse Amperage	Protected Circuit	Failure Symptom	Replaceable Fuse Type	Dimensions
Back Light	F01	10A	① Reverse Light Power ② Brake Switch Power	Reverse Light and Brake Switch Failure	32V 10A HB Medium Blade Fuse	19mm x 19mm
Horn Power Supply	F02	10A	Horn Switch	Horn Failure	32V 10A HB Medium Blade Fuse	19mm x 19mm
Light Power	F03	15A	Lighting System	Position Lamp, Low Beam, and High Beam Failure	32V 15A HB Medium Blade Fuse	19mm x 19mm
Turn Signal	F04	5A	Turn Signals	Left Turn Signal, Right Turn Signal, and Hazard Lights Failure	32V 5A HB Medium Blade Fuse	19mm x 19mm
Display Device	F05	15A	Multimedia Display Device	Multimedia Display Screen Will Not Turn On	32V 15A HB Medium Blade Fuse	19mm x 19mm

Fuse Name	Fuse Number	Fuse Amperage	Protected Circuit	Failure Symptom	Replaceable Fuse Type	Dimensions
Backup Power	F06	15A	USB Charging Module	Vehicle Unable to Power On	32V 10A HB Medium Blade Fuse	19mm x 19mm
Ambient Light	F07	15A	① Overhead Ambient Light Power ② High-Mounted Brake Light Power	Overhead Ambient Light and High-Mounted Brake Light Will Not Turn On	32V 15A HB Medium Blade Fuse	19mm x 19mm
Front Power	F08	15A	Reserved Power /	/	32V 15A HB Medium Blade Fuse	19mm x 19mm

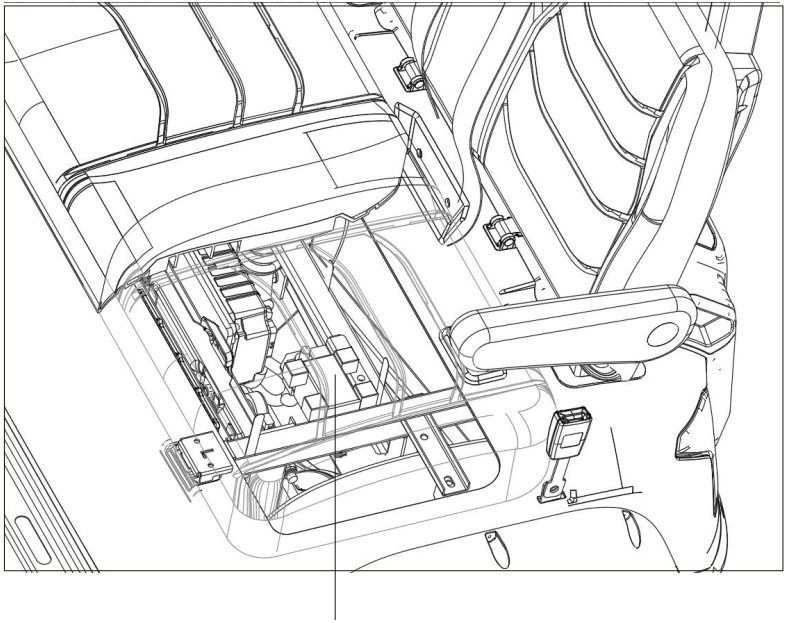

Fuse Box

Front power 15A	Back light 10A
	Horn power supply 10A
	Light power 15A
	Turn signal 5A
	Display device 15A
	Backup power 15A
	Ambient light 15A

Fuse Box Label

Relay Name	Relay Model	Function	System	Failure Symptom	Recommended Replacement Relay
Flasher Relay	Xinyufangc-heng ZT509-12V-T	Hazard Warning Switch Power	Turn Signals	Turn signals do not illuminate, stay illuminated without flashing, or flash erratically	Recommend a fixed flash frequency of 70-90 times/min.
Horn Relay	Yongde 62612as 12V40A	Horn Power	Horn	Horn is silent, very quiet, or continu-ously sounds.	HFV15N/12-H1T-R
Brake Light Relay	Yongde 62612as 12V40A	Brake Light Power	Brake Lights	Brake lights do not Brake lights do not illuminate or stay illuminated continuously.	HFV15N/12-H1T-R
Parking Light Relay	Yongde 62612as 12V40A	Position Lamp, Grille Lamp Power	Position Lamps, Grille Lamps	Position lamps/grille lamps do not illuminate or are dim.	HFV15N/12-H1T-R

Relay Name	Relay Model	Function	System	Failure Symptom	Recommended Replacement Relay
Headlight Relay	Yongde 62612as 12V40A	Low Beam, High Beam Power	Headlights	Low beams/high beams do not illuminate or are dim.	HFV15N/12-H1T-R

Horn Relay

Brake Light Relay

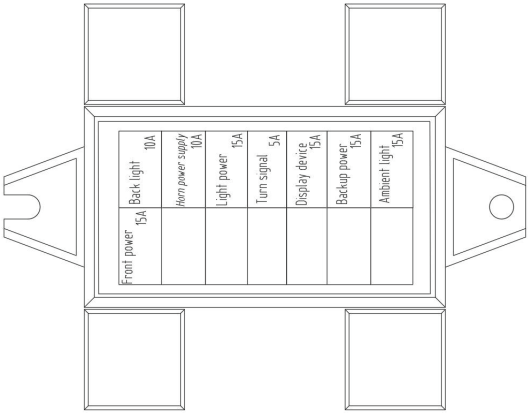

Parking Light Relay

Headlight Relay

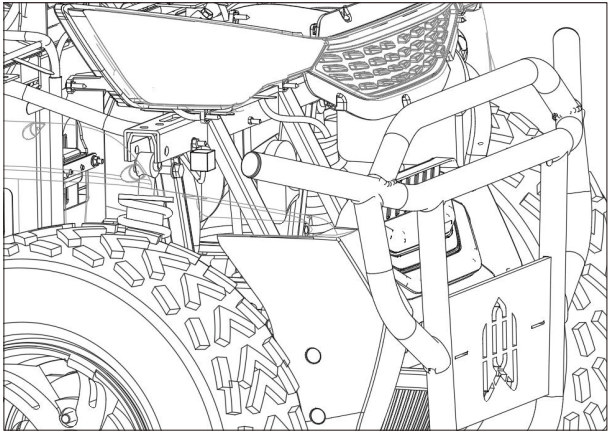

Flasher Relay

*Applies to vehicles equipped with a multifunction steering wheel. Vehicles without this option may have a different steering wheel appearance, which is not covered in this manual.

Multifunction Steering Wheel

HOME Button
Returns the multimedia screen to the main menu.

Volume +
Short press increases multimedia volume by 1 unit. Long press increases volume continuously in 1-unit increments.

Volume -
Short press decreases multimedia volume by 1 unit. Long press decreases volume continuously in 1-unit increments.

Previous Track
In music playback mode, a short press plays the previous track. In radio mode, a short press steps backward, and a long press searches backward for the previous station.

Next Track
In music playback mode, a short press plays the next track. In radio mode, a short press steps forward, and a long press searches forward for the next station.

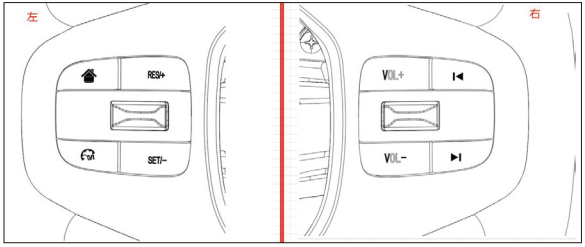

Cruise Control

Cruise Control Switch
While the vehicle is moving forward, a short press puts the vehicle into cruise control standby mode (indicated on the instrument panel). A short press while in cruise control or standby mode deactivates cruise control.

Cruise Speed -
In cruise control standby mode, a short press activates cruise control at the current speed. Subsequent short presses decrease the set speed by 1 unit.

Cruise Speed +
In cruise control mode, a short press increases the set speed by 1 unit. In cruise control standby mode, a short press resumes the previously set speed.

High-mounted Brake Light

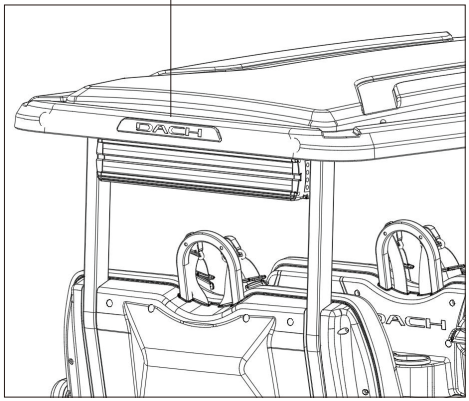

Sound Bar/Speaker Bar

Roof Logo Light

Ambient Roof Light(s)

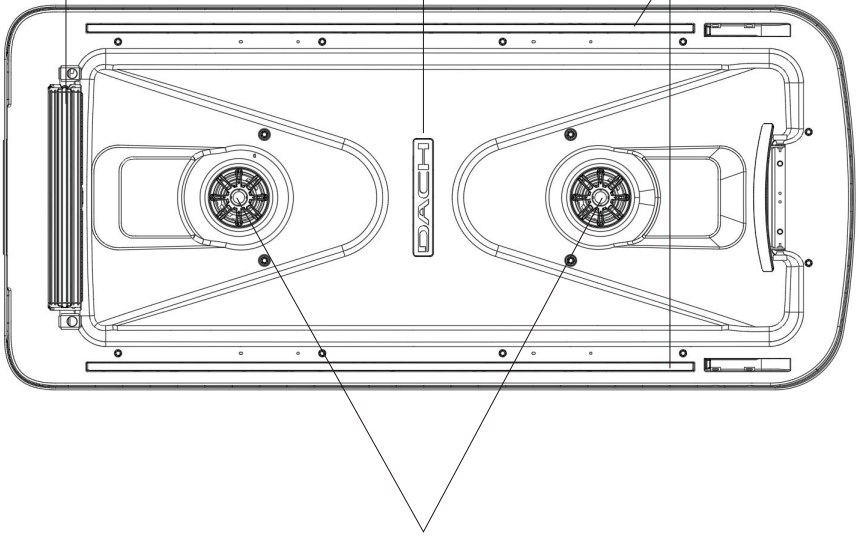

Roof Speakers

High-Mounted Brake Light

When the driver presses the brake pedal, the high-mounted brake light illuminates red, allowing following vehicles to quickly detect braking and react accordingly, preventing rear-end collisions.

Roof Logo Light

Located in the center of the roof, the roof logo light serves as both interior decoration and illumination, contributing to both the vehicle's practicality and safety.

Ambient Roof Lights

Installed on both sides of the roof, these decorative lights offer various modes and colors. They can be controlled via the multimedia display, allowing adjustments to on/off status, brightness, mode, and color. Modes include single color, breathing, sparking, music rhythm, multicolor, and more (8 total). Color options include red, green, blue, yellow, cyan, purple, white, and more (9 total).

Sound Bar

Positioned at the rear of the vehicle in an elevated location, the sound bar works in conjunction with the roof speakers to create a surround sound effect. Multiple music playback options enhance the user's audio experience.

Roof Speakers

As a crucial component of the vehicle's audio system, the speakers are located at the front and rear of the roof. They provide musical enjoyment and deliver important information like traffic updates or navigation instructions, enhancing safety. The speakers' integrated ambient lights can be synchronized with the roof ambient lights through the multimedia display, allowing unified control over color, brightness, and dynamic effects for a more immersive in-cabin experience.

Bluetooth Music Playback

1.After turning on the vehicle, locate the multimedia display's corresponding Bluetooth device name in your phone's Bluetooth settings and pair/connect.

2.Once connected, select your preferred music app on your phone and begin playback.

3.Simultaneously, activate Bluetooth music mode on the multimedia display by pressing the music button. The music playback interface will then appear.

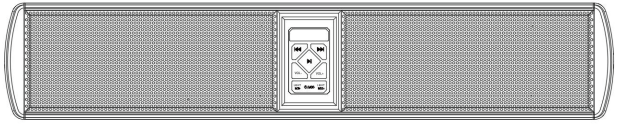

USB Music Playback

1.After turning on the vehicle, insert a USB drive containing MP3 or WMA format music files into the USB port.

2.Simultaneously, activate USB music mode on the multimedia display by pressing the music button. The music playback interface will then appear.

In addition to the integrated control system, the sound bar also features an independent control system with mechanical buttons located on the sound bar itself. This caters to the music playback needs of rear passengers, enhancing their overall experience.

Mode Switching and Connection

1.After powering on the sound bar, press button ① to switch from AUX mode to Bluetooth mode. In Bluetooth mode, the sound bar operates independently of the multimedia display.

2.Access your phone's Bluetooth settings and locate the sound bar's corresponding Bluetooth device name for pairing and connection.

3.Once connected, use your phone's music player to transmit and play your desired music through the sound bar.

Lighting Selection

Press button ② or button ③ to select the lighting mode.
Press and hold button ③ to turn off all lights.

Volume Control

1.Press button ④ to decrease the sound bar's volume.
2.Press button ⑤ to increase the sound bar's volume.

Track Selection

1.During music playback, press button ⑥ to pause. Press button ⑥ again to resume playback.
2.Press button ⑦ to select the previous track.
3.Press button ⑧ to skip to the next track.

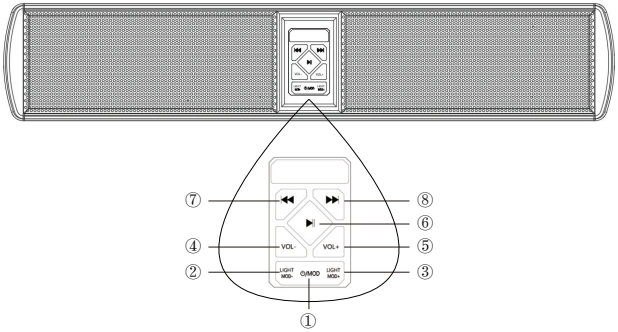

Maintenance

Wheel Replacement

To remove and install a wheel on your vehicle:

1. With the wheels blocked to prevent the vehicle from moving, loosen the wheel nuts.
2. Elevate the vehicle with a jack and remove the wheel nuts and the wheel.
3. Reverse the removal steps when installing the wheel.

⚠ Warning

Ensure the battery is powered off and gear know in "N" position with one-button start "OFF" before starting any wheel or brake maintenance. Failing to do so could inadvertently start the vehicle, leading to movement that may result in death or severe iniury.

Brake Adjustment

Before you operate the vehicle, press down on the brake pedal several times to make sure the brakes are functioning properly.

⚠ Warning

Consult your dealer before using your vehicle if you suspect brake problems. Brake failure could result in a serious accident. Death or serious personal injury can result from failing to comply with the safety instructions in this manual.

Non-Lifted Truck Lifting Points

Lifted Truck Lifting Points

Jacking Points

Lifting Points on Non-Lifted Trucks

1.Front Frame Just Below Front Bumper
2. Rear Lifting Points on Rear Axle Half-Shafts

Lifting Points on Lifted Trucks

1. On Frame Floor

Regular Maintenance Chart

Regular maintenance is essential to ensure optimal performance and safe operation of your electric vehicle.

	Inspection Items	Daily Inspection	100miles 160km Per Month	600miles 1000km Every6 Months	1200miles 2000km Per Year	2500miles 4000km Every 2 Years	5000miles 8000km Every 4 Years
Pre-Trip Inspection	Electrical capacity	S	S	S	S	S	S
	Clean the battery case and check if the battery terminals are tight.	S	S	S	S	S	S
	Check the brake pedal travel to make sure it meets the requirement, and adjust if necessary.	C	CA	CA	CA	CA	CA
	Check steering operation	C	C	C	C	C	C
	Check the tire pressure, tread depth, and tire surface for any damage.	C	CA	CA	CA	CA	CA
	Check to make sure that all bolts, nuts, screws, and rivets are tight.	C	C	C	C	C	C
	Check to make sure that the lighting system is working properly.	C	C	C	C	C	C
	Check the wiring harness connections to make sure they are not loose or broken.		C	C	C	C	C
Per Month	Clean pedal section		CL				
	Check all wiring to see if there's any crack, aging or wearing point			C	C	C	C
Per Year	Check if the damper is leaking oil or the spring is damaged			C	C	C	C

S: "Service". This means that the item should be inspected or serviced at the specified interval.
C: "Check". This indicates that you should check the item.
CA: "Check and Adjust". This means you should inspect the item and make any necessary adjustments.
CL: "Clean and Lubricate". This indicates that you should clean and then lubricate the specified item.

Storing the Vehicle

Preparation

1.Ensure tire pressure is set to: 230kPa (33 psi).

2.Clean the exterior of the vehicle.

3.For short-term storage (less than 30 days), turn off the key ignition power, as indicated in Page 37 label No.④

4.For long-term storage (more than 30 days), turn off the power battery power switch.

5.Cover the vehicle with a breathable car cover and store it in a dry, well-ventilated area.

Operation and Control

Powering the Battery On/Off

The power battery is located in the front cabin, and the battery switch is on the right side of the battery.

Power On: Briefly press the battery switch. The switch light will illuminate blue, indicating the battery is powered on.

Power Off: Press and hold the battery switch. The switch light will turn off, indicating the battery is powered off.

Due to different product configurations or power battery system upgrades, the switch type and appearance may vary. These variations will not be detailed in this manual.

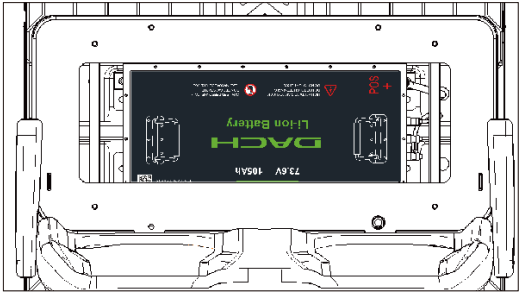

Battery Location

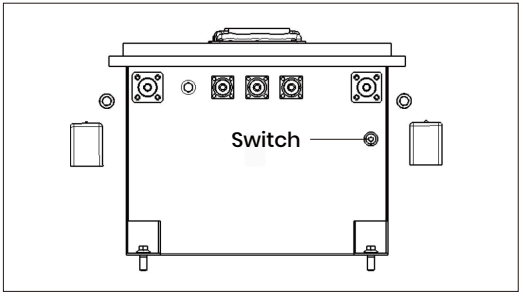

Switch Location

Vehicle Startup

1.Using the NFC Key

Bring the NFC key within approximately 5mm of the NFC sensing area. You'll hear a startup sound, and the multimedia screen will light up, indicating the vehicle has started.

2.Using the Bluetooth Key

With the paired Bluetooth key device nearby, briefly press the start button. You'll hear a startup sound, and the multimedia screen will light up, indicating the vehicle has started.

Vehicle Shutdown

1.Using the NFC Key

While the vehicle is powered on, bring the NFC key within approximately 5mm of the NFC sensing area. You'll hear a shutdown sound, and the multimedia screen will turn off, indicating the vehicle has shut down.

2.Using the Start Button

Press and hold the start button for 2 seconds. You'll hear a shutdown sound, and the multimedia screen will turn off, indicating the vehicle has shut down.

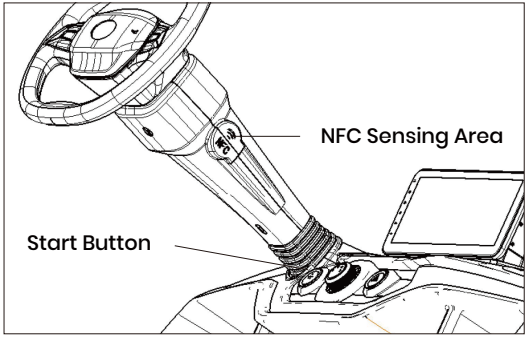

NFC Sensing Area Diagram

Caution

01.Do not turn off the vehicle's power while driving!

02.Do not depress the accelerator pedal while starting the vehicle. Doing so will cause the vehicle to detect an accelerator pedal malfunction.

03.Place the gear selector in the "N" (Neutral) position before starting the vehicle. Otherwise, the vehicle will detect a gear selector switch malfunction.

Driving Operations

Reversing

With the vehicle powered on, depress the brake pedal and rotate the gear selector switch to the left. The multimedia screen will display the rearview camera image, and the instrument panel gear indicator will display "R." The vehicle is now in reverse mode. Release the brake pedal and gently press the accelerator pedal to move the vehicle backward.

Driving Forward

With the vehicle powered on, depress the brake pedal and rotate the gear selector switch to the right. The instrument panel gear indicator will display "D." The vehicle is now in drive mode. Release the brake pedal and gently press the accelerator pedal to move the vehicle forward.

ECO Mode

While in drive mode, rotate the gear selector switch to the right. The instrument panel will display "ECO." The vehicle is now in economy mode. In economy mode, the vehicle can only move forward, and the maximum speed is limited to 15 mph. To exit economy mode, rotate the gear selector switch to the left.

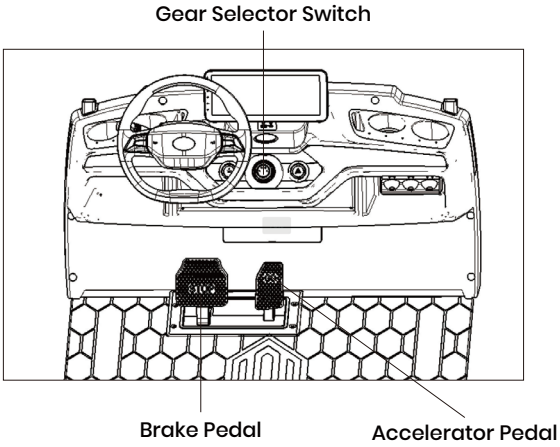

Caution

When turning off the vehicle's power, place the gear selector switch in the "N" (Neutral) position.

Driving Operations

Turn Signal Operation

Move the turn signal lever up to activate the right turn signal. The right turn indicator on the instrument panel will flash in sync with the right turn signal lights on the vehicle. The turn signal will cancel automatically when the steering wheel is turned back to center or the lever is moved up again.

Move the turn signal lever down to activate the left turn signal. The left turn indicator on the instrument panel will flash in sync with the left turn signal lights on the vehicle. The turn signal will cancel automatically when the steering wheel is turned back to center or the lever is moved down again.

Hazard Warning Lights

Press the hazard warning light switch to activate all four turn signal lights. The left and right turn indicators on the instrument panel will flash simultaneously. Press the switch again to turn off the hazard warning lights.

Note: The turn signals will not function when the hazard warning lights are activated.

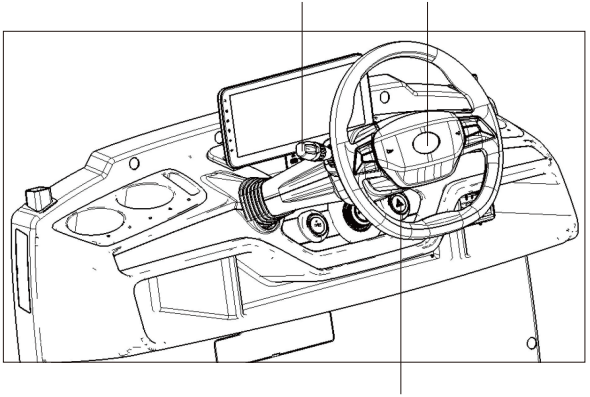

Electric Horn Operation

When the electric horn switch in the middle of the steering wheel is pressed, the electric horn makes a sound and stops when the switch is released.

Light Operations

Position Lights

Rotate the light switch counterclockwise one position. The position light indicator on the instrument panel and the vehicle's position lights will illuminate. Reverse the operation to turn off the position lights.

Low Beam Headlights

With the light switch in the position light position, continue rotating it counterclockwise. The vehicle's low beam headlights will turn on. Reverse the operation to turn off the low beam headlights.

High Beam Headlights

With the light switch in the low beam headlight position, push the switch outwards. The high beam indicator on the instrument panel and the vehicle's high beam headlights will illuminate. Reverse the operation to turn off the high beam headlights.

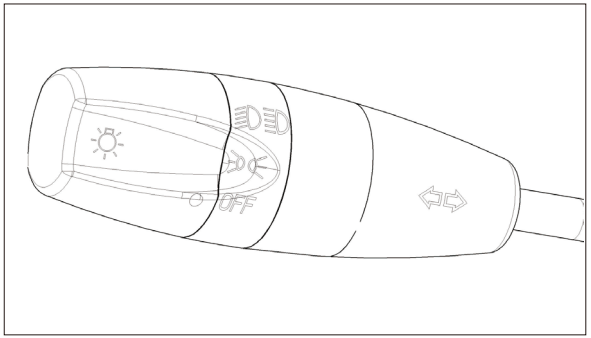

Passing Lights (Flash-to-Pass)

With the light switch in any position, pull the switch inwards. The high beam indicator on the instrument panel and the vehicle's high beam headlights will illuminate, activating the passing lights. Release the switch to return it to its original position and turn off the passing lights.

USB Data Port

Insert a USB drive for music playback, phone charging, and other functions.

Wireless Phone Charging

Compatible with wireless charging-enabled phones. Charging power is approximately 15W.

Caution

Do not cover the wireless charging area with metallic objects. This may cause the objects to heat up and prevent charging.

Do not place NFC keys, cards, or similar items on the wireless charging area. This may demagnetize the NFC key and affect its functionality.

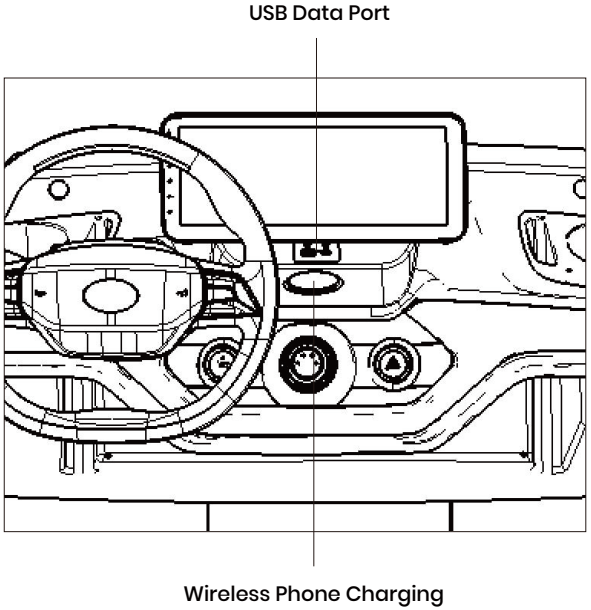

Rims & Tires

Tire Conditions

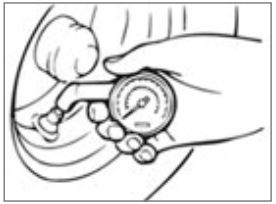

Tire Air Pressure

Check your tire pressure before operating the vehicle

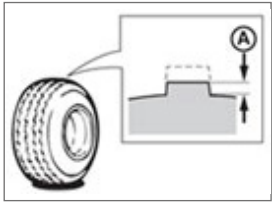

Tire Wear Limit

Inspect the tire surface for any damage, cracks, or embedded objects. Replace the tire when the tread has worn down to 1 mm (0.04 inches).

· Wheel Lug Nut Torque: 100Nm
· Tire Pressure set as 230 Kpa (23psi)

Tire Care Tips

⚠ Warning

Tires degrade over time due to a number of factors, such as weather, storage conditions, and usage (load, speed, inflation pressure). In general, tires should be replaced after six years, regardless of tread wear. However, heat from frequent high-load conditions in hot climates can accelerate the aging process and may require more frequent tire replacement.

You should also replace your spare tire at the same time you replace your road tires or after six years due to aging, even if it has not been used.

⚠ Warning

Underinflation is the most common cause of tire failure and can lead to catastrophic wheel failure, tread separation, or blowouts, resulting in loss of vehicle control and increased risk of injury. Underinflation increases sidewall flexing and rolling resistance, leading to heat buildup and internal tire damage. It can also cause uneven tire wear, unpredictable handling, and traffic accidents. A tire can lose half of its air pressure and still appear inflated!

⚠ Warning

When mounting wheels, be sure to clean any corrosion or dirt from the wheel mounting surfaces on the hub, brake drum, or brake rotor. Make sure to secure any fasteners that attach the rotor to the hub so they do not interfere with the wheel mounting surface. Installing a wheel without proper metal-to-metal contact on the wheel mounting surface can result in loose wheel nuts, wheel detachment, loss of vehicle control, personal injury or death.

Vehicle Starting Procedure

Vehicle Inspection

Pre-trip vehicle inspections are an important step in ensuring driving safety. A responsible driver should perform the necessary vehicle checks before each trip to make sure that it is in good working order. Please check the following items before each use:

Inspection Catagories	Inspection Item	Inspection Details
General Inspection	Battery Condition	Please check whether the identification, nameplate, warning labels, etc. on the battery box body are clearly visible. Check the box surface for serious corrosion, deformation, cracks and other damage, and whether the mechanical interface between the battery box and the exterior is firm and reliable.
	Tires condition	Inspect the tire surface for damage, cracks, and any objects. When the tire tread wears down to less than 0.04 inches (1mm), replace the tire immediately.
	Body & Chassie	Carefully inspect the body and chassis for any damage or missing parts before each use.
Performance Inspection	Braking Pedal Operation	The brake pedal is marked with a "STOP" sign. When the vehicle is running, step on the brake pedal to check if the brake system is functioning properly and the brakes are responsive.
	Accelerator Pedal Operation	The accelerator pedal is marked with a "GO" sign. When the vehicle is powered on and the gear selector is in the forward "D" or reverse "R" position, pressing the accelerator pedal will automatically release the electromagnetic brake and cause the vehicle to move in the selected direction (forward or reverse). As the accelerator pedal is pressed, the speed will increase until full speed is reached. When the accelerator pedal is released, the power will be cut off and the motor will stop running.
	Reversing Buzzer	When the gear selector is shifted into the reverse "R" position, the reversing buzzer will emit a warning tone.
	Steering System	Turn the steering wheel gently to the left and right. The vehicle should steer easily, and the steering wheel should not turn automatically. Check the steering system for excessive play. Move the steering wheel up and down, and back and forth. If you notice excessive play or hear any noises, it indicates that some components need to be replaced or adjusted. Please have the steering system serviced or repaired immediately.

Starting the Vehicle

1. Confirm that you have carefully read this user manual.
2. Familiarize yourself with and understand the vehicle's controls, indicators, and operations.
3. Observe that all passengers are seated, have fastened their seat belts, and are holding onto the seat handles.
4. Determine the direction in which the wheels will turn.
5. After ensuring that there are no obstacles in front, press the one-key start button to power on the vehicle.
6. Depress the brake pedal while simultaneously switching the gear selector knob to select the driving direction.
7. Slowly depress the accelerator pedal, the electromagnetic brake disengages, the vehicle begins to move, and as the accelerator pedal is gradually depressed, the speed will gradually increase until full speed is reached.

⚠ Warning

When driving downhill, the operator must control the vehicle's speed. Steep terrain or other conditions may require the use of both pedal braking and electromagnetic braking.

Parking and Exiting the Vehicle

1. When the vehicle needs to slow down during driving, move your right foot to the brake pedal and gently press down on the brake pedal to slow the vehicle down to a stop.
2. After the vehicle has stopped, the electromagnetic brake will engage immediately to prevent the vehicle from rolling.
3. After shifting the gear selector knob to neutral "N", press the one-key start button to turn off the entire vehicle power.

Note:Switching the gear selector knob to neutral 'N' while driving will cause the vehicle to lose power and slow to a stop.

Note: When leaving the vehicle for an extended period of time, turn off the entire vehicle power and take the remote key with you to avoid accidents.

Note: When the vehicle is parked for a long time, it is necessary to disconnect the power battery switch in the seat bucket and the whole vehicle power switch to reduce the power battery power consumption and avoid the situation that the vehicle cannot be started next time.

DACH

The Earth At Your Wheel

DCD VEHICLE CORP.
www.dachvehicles.com